# Lillian Lever

## EXPOSED RAIL SHOWER & BATH SET

## Features

**WELS 3 Star rated, 8L/min**

**Rail:**

- For new installations only – requires separate hot and cold water inlets
- ¼ turn ceramic disc lever handles
- Made from solid brass

**LILLIAN Overhead Shower (411138):**

- Rain-style water flow
- Made from solid brass
- Brass swivel joint
- Female ½" BSP inlet

Modern Vintage COLLECTION

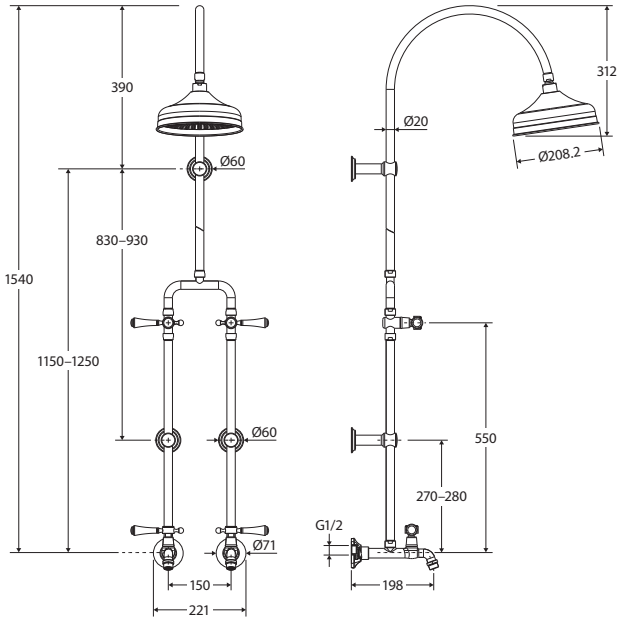


## Available in

Chrome
**455123CC**

Electroplated Matte Black
**455123BL**

PVD Brushed Nickel
**455123NN**

PVD Urban Brass
**455123UU**

## Cleaning & Care

- Regularly clean with mild soapy water using a microfibre cloth.
- In highly polluted or coastal locations, we recommend cleaning 2-3 times per week.
- Do not use harsh detergents, bleach, cream cleaners or citrus based cleaners. These substances are abrasive and will damage the surface.
- Do not use undue pressure and wipe in one direction only.

WaterMark

The more stars the more water efficient
WATER RATING
www.waterrating.gov.au
8.0 litres per minute
In accordance with AS/NZS 6400
Licence No. 0252
Fienza

We aim to ensure that specifications are correct at the time of publication. All measurements are shown in millimetres. Always use measurements of actual product received for final specification as the technical drawing may contain differences. Due to printing limitations, physical colour may vary from the image shown. Fienza reserves the right to make modifications without prior notice.